Development of Cone Penetrometer Method to Determine Soil Hydraulic Properties

By Molly M. Gribb,[1] Member, ASCE, Jirka Šimůnek,[2] and Michael F. Leonard[3]

Abstract: Effective cleanup of contaminated sites requires characterization of the hydraulic properties of impacted soils. To this end, we present a new method for estimating soil-water characteristic and hydraulic conductivity curves with a modified cone penetrometer. A prototype has been designed and fabricated with a screen close to the penetrometer tip and two tensiometer rings 5 and 9 cm above the screen. Water is injected into the soil under constant pressure. The volume of water imbibed into the soil is monitored, as are the tensiometer ring readings registering the advancement of the wetting front. These transient flow data are used to estimate soil hydraulic properties via numerical inversion of Richards' equation. We present the results of cone tests performed under variably saturated conditions in a laboratory aquifer system. Results are compared with independent measurements of the soil hydraulic properties to benchmark the performance of the instrument and method of analysis. The saturated hydraulic conductivity of the soil is well predicted by the method for saturated and unsaturated conditions. Further work is required to obtain good estimates of the other parameters describing the hydraulic properties of the soil.

INTRODUCTION

Definition of the hydraulic properties of unsaturated soils is increasingly necessary for geotechnical applications. Knowledge of the soil-water characteristic and hydraulic conductivity curves $\theta(h)$ and $K(h)$ is particularly important for accurate numerical modeling of variably saturated flow and contaminant-transport processes. Although these soil properties can be determined in the laboratory or in the field, in-situ methods often are preferred because they represent behavior under field conditions.

Direct measurement of a limited number of $\theta(h)$ and/or $K(h)$ data points in the field may be obtained using instantaneous profile, crust, or infiltrometer methods, among others (Klute and Dirksen 1986; Benson and Gribb 1997). The transient instantaneous profile method and the steady-state crust method both involve inducing a flow of water through the soil profile while concurrently measuring the moisture content or pressure head distribution with depth. The $K(h)$ values are determined from Darcy's law. The tension disc infiltrometer is used to impart a steady-state flow into the soil at various negative supply pressure heads to obtain $K(h)$ data points. Other devices, such as the Guelph permeameter and double-ring infiltrometer, are used to obtain K_s values based solely on inflow (Bouwer and Jackson 1974; Reynolds 1993). In all cases, the analytical and quasi-analytical methods of data analysis require adherence to specific boundary and initial conditions that are often difficult to control in the field. Linearization of the governing equation of flow and geometric approximations to boundary conditions generally are required. In addition, tension disc infiltrometers and Guelph permeameters require steady-state flow conditions, which may not be achieved during a short-term test and can be a source of significant error.

Parameter optimization is an indirect approach that makes it possible to obtain $K(h)$ and $\theta(h)$ simultaneously from transient data (Kool et al. 1987). First, the flow event is modeled with the governing flow equation subject to appropriate boundary and initial conditions. Suitable analytical models are needed to represent $K(h)$ and $\theta(h)$. The unknown parameters of these models are determined by minimization of an objective function describing the differences between some measured flow variables and those simulated with the model. Work by Zachmann et al. (1981) and Dane and Hruska (1983) to obtain $K(h)$ estimates from infiltration data was followed by the further development of methods for analysis of one-step and multistep column outflow data [see, e.g., Kool et al. (1985), Parker et al. 1985; van Dam et al. (1992, 1994), and Eching and Hopmans 1993]. Russo et al. (1991) considered the applicability of such methods to field data and Bohne et al. (1992) used a parameter optimization method to analyze ponded infiltration test data. More recently, Šimůnek and van Genuchten (1996, 1997) and Šimůnek et al. (1998) applied an optimization procedure to tension infiltrometer data to obtain estimates of the soil hydraulic properties. Šimůnek and van Genuchten (1996, 1997) showed that the disc infiltrometer experiment could provide information about the hydraulic conductivity, as well as the soil-water characterization curve with numerically generated data. When parameter optimization was applied to field data excellent agreement between the unsaturated hydraulic conductivities calculated with Wooding's (1968) analytical solution and the numerical inversion was obtained (Šimůnek et al. 1998). However, the correspondence between optimized and laboratory measured characteristic curves was not as good. Inoue et al. (1998) applied parameter optimization for the in-situ determination of soil hydraulic functions using a multistep soil-water extraction technique. By comparing the optimized and the independently measured hydraulic functions they concluded that this new experimental procedure could provide accurate soil hydraulic data.

Gribb (1993, 1996) proposed a new cone penetrometer tool (e.g., cone permeameter) and use of parameter optimization to estimate soil hydraulic properties at depth in the field. Leonard (1997) further developed the cone permeameter, as presented here. Cone penetrometers originally were developed to evaluate strength characteristics of soils, via measuring tip resistance and sleeve friction during penetration at a constant rate of 2 cm/s. Correlation of these measurements with soil type also is possible. Other developments have led to methods for estimating the hydraulic conductivity and moisture content of soils. Pore-water pressure measurements can be used to estimate the hydraulic conductivity K_s of saturated, low-permeability cohesive soils ($K_s \leq 10^{-6}$ cm/s) with piezocones by analysis of dissipation rates (Campanella and Robertson 1988).

[1]Asst. Prof., Dept. of Civ. and Envir. Engrg., Univ. of South Carolina, Columbia, SC 29208.

[2]Asst. Res., U.S. Salinity Lab., Agric. Res. Service, U.S. Dept. of Agric., Riverside, CA 95616.

[3]MS Student, Dept. of Civ. and Envir. Engrg., Univ. of South Carolina, Columbia, SC.

Note. Discussion open until February 1, 1999. To extend the closing date one month, a written request must be filed with the ASCE Manager of Journals. The manuscript for this paper was submitted for review and possible publication on August 20, 1997. This paper is part of the ***Journal of Geotechnical and Geoenvironmental Engineering***, Vol. 124, No. 9, September, 1998. ©ASCE, ISSN 1090-0241/98/0009-0820–0829/$8.00 + $.50 per page. Paper No. 16466.

The BAT permeameter commonly is installed using cone push technology. This device is used to estimate the hydraulic conductivity of saturated subsurface soils with values of $K_s \leq 10^{-4}$ cm/s with an adaptation of Hvorslev's (1951) analytical equation (Petsonk 1985). The Hydrocone (In Situ Group, Orlando, Fla., personal communication, 1997) water sampler also may be used to obtain hydraulic conductivity estimates of saturated soil (Scaturo 1993). Moisture-sensing cone penetrometers have been developed to allow measurement of moisture content in real time using time domain reflectrometry (Dayton and Holmes 1993; Topp et al. 1996). However, none of these tools was designed to determine the soil hydraulic conductivity and soil-water characteristic curve simultaneously under unsaturated conditions.

In this paper, we describe the fabrication, calibration, and operation of a modified cone penetrometer that injects water from a screen and measures pore-water pressures at two locations in the soil. Flow data are analyzed via parameter optimization using an inverse code developed by Šimůnek and van Genuchten (1996) to estimate the hydraulic properties of the soil. This device, called a cone permeameter, also may be used as a simple piezometer to determine the hydraulic conductivity of saturated soil. We present a set of prototype tests performed in a laboratory aquifer system under saturated and unsaturated conditions. Results are compared with independent measurements of the soil hydraulic properties to benchmark its performance.

PROTOTYPE CONE PERMEAMETER

Design and Construction

The prototype was composed of four parts: (1) the shaft; (2) the screen; and (3) two porous ceramic rings/tensiometer assemblies (Fig. 1). The shaft was constructed from schedule 40 stainless steel pipe. A 5-cm screened section was made from slotted, stainless steel pipe, which had a 60° conical tip welded at the bottom to emulate a standard cone penetrometer.

Constant head is supplied to the screen using a microprocessor-controlled solenoid valve assembly. Cumulative flow volume imbibed into the soil is determined from scale readings of the mass of water removed from the source bottle (Fig. 2).

Pore-water pressure increases resulting from water flow into the soil, are measured with tensiometer rings 5 and 9 cm above the screened section. The tensiometer rings were made from 1-bar air entry porous ceramic cups obtained from Soilmoisture (1989). Annular water reservoirs behind the rings are connected by a tubing system to rigid plastic tube bodies attached to the top of the shaft. The tubing system consists of outer plastic tubes (0.32-cm diam.), which maintain the hydraulic connection between the tube bodies and the annular water reservoirs behind the ceramic rings, and inner 0.16-cm tubes, which are used to bleed air out of the tensiometer assemblies. Pressure transducers are attached to the tube bodies to sense pressure changes in the soil. This prototype is limited in its

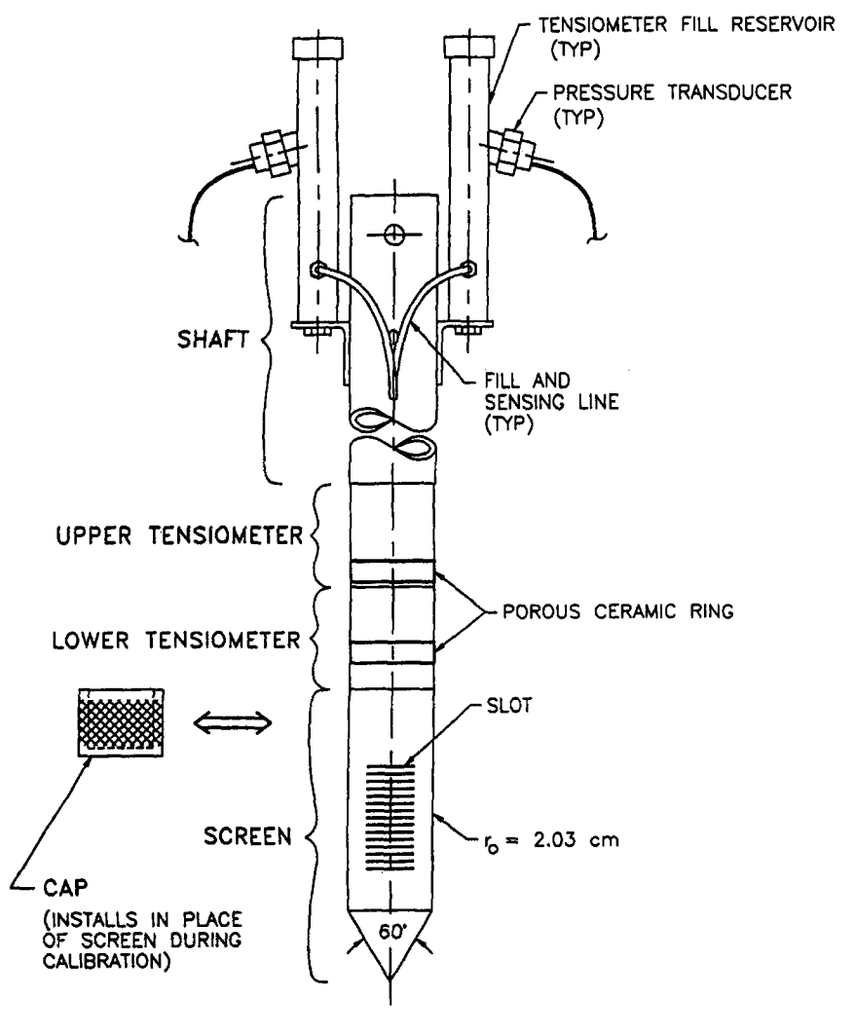

FIG. 1. Prototype Cone Permeameter Sections

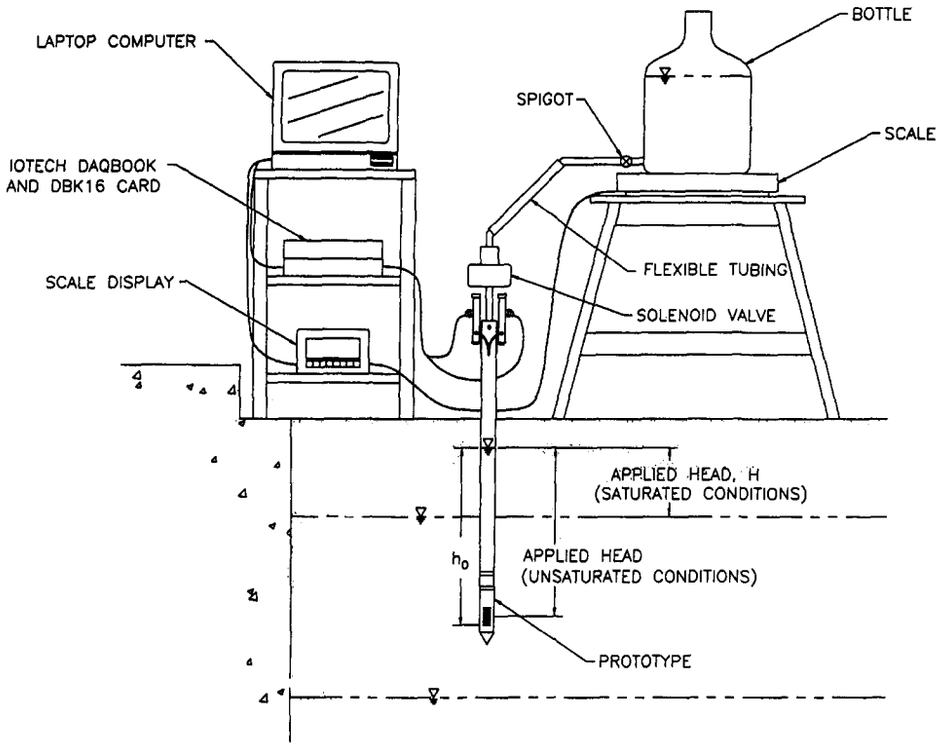

FIG. 2. Setup of Cone Permeameter Prototype and Instrumentation

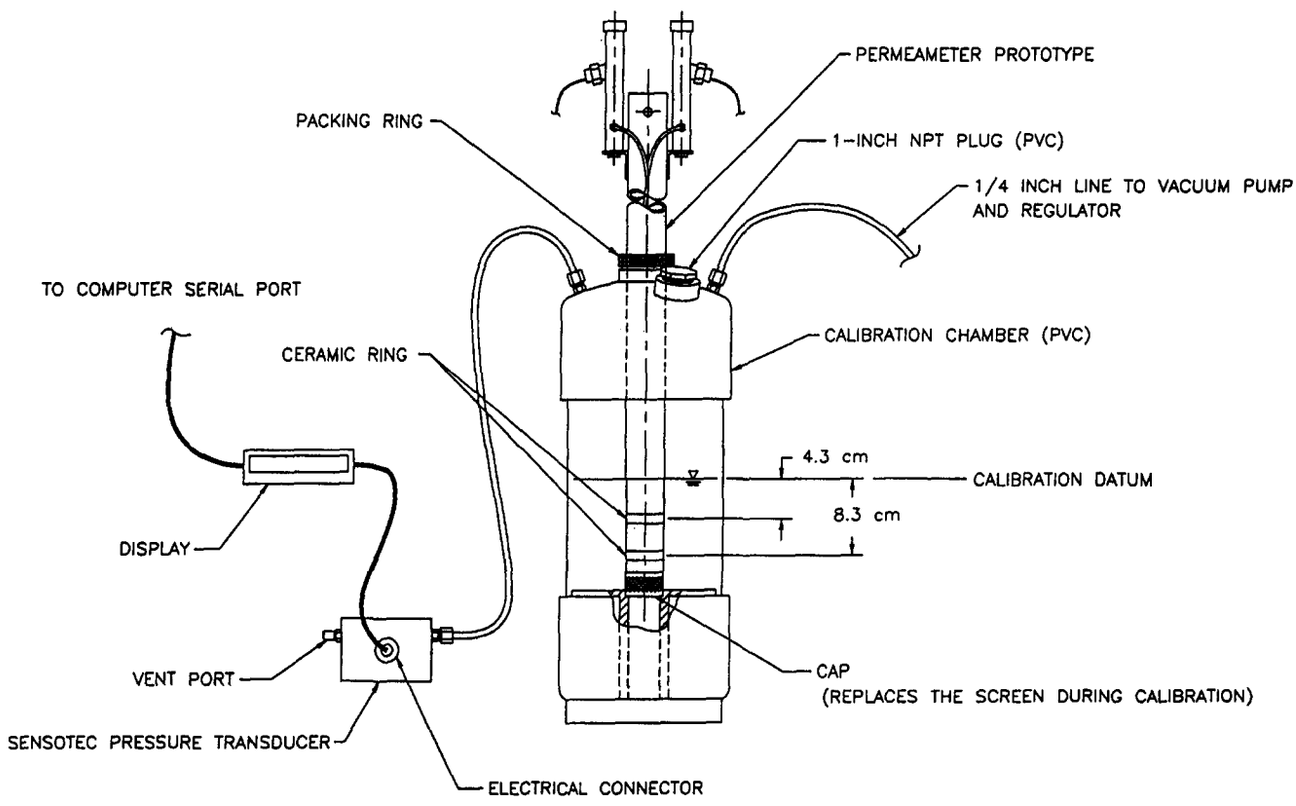

FIG. 3. Calibration Chamber Setup

application to depths of 70 cm below ground surface because of the external mounting of the tube bodies and pressure transducers. Cavitation limits the application of this prototype to near-saturated soils (i.e., pressure heads > −800 cm). The next-generation prototype will be fabricated with internal pressure transducers so that it can be pushed to depths limited solely by the standard cone push equipment.

An IOtech DBK16 strain gauge amplifier card is used to power the 5-psi (34.47 kPa) pressure transducers (Omega Technologies Co. 1994) and a Daqbook 100 package is used for A/D conversion (IOtech Inc. 1994). An Ohaus (1996) scale is interfaced directly to a computer serial port for data acquisition. Software control is achieved using Labtech Notebook Pro for Windows (Laboratory Technologies Corp. 1994).

Calibration

The relationship between transducer readings and pore-pressure values was obtained for the prototype tensiometer elements before aquifer testing via calibration in the laboratory. An airtight chamber was constructed (Fig. 3) to hold the tensiometer sections under water while known underpressures of air were applied in 25-cm increments from 0 to −200 cm. This covered the range of expected pressure head values in the laboratory aquifer during testing. Pressure values were adjusted for the static head of water above the tensiometer rings, and net applied pressures were plotted against the transducer output voltages. The data were fitted with a least-squares regression equation to obtain calibration lines for each tensiometer ring/pressure transducer assembly (Leonard 1997).

Application

The cone permeameter presented here was designed for determining soil hydraulic properties in saturated and unsaturated soil with $h > -800$ cm to a depth of 70 cm below ground surface. In saturated soil, it can be used as a simple piezometer for obtaining K_s; however, its primary purpose is for determining hydraulic properties in unsaturated soil (Gribb 1996).

THEORY

Determination of K_s in Saturated Soil

Under saturated conditions, the saturated hydraulic conductivity K_s of the soil can be determined from use of the cone permeameter as a piezometer with a simple analytical equation that relates the source strength and flow rate to the hydraulic conductivity. A constant head of water is supplied to the screened section and the flow of water into the soil is measured. Hvorslev's (1951) equation for constant-head injection of water through a partially screened piezometer in an unconfined aquifer is

$$K_s = S\frac{Q}{H} \tag{1}$$

where S = shape factor; H = applied head above the groundwater table; and Q = volumetric rate of flow into the soil from the screened section. The shape factor S depends on the source geometry and the ratio of horizontal to vertical hydraulic conductivity $R_k = K_h/K_z$

$$S = \frac{\ln\left(\frac{R_k^{0.5}L}{2r_0} + \sqrt{1 + \left(\frac{R_k^{0.5}L}{2r_0}\right)^2}\right)}{2\pi L} \tag{2}$$

where L = length of the screened section; and r_0 = radius of the screened section. Given the prototype dimensions of L = 5.0 cm and r_0 = 2.0 cm, the shape factor S calculated for the cone permeameter = 0.0333 cm^{-1} for an assumed value of R_k = 1.0.

Hydraulic Property Estimation in Unsaturated Soil

In unsaturated soil, the moisture retention and hydraulic conductivity curves $\theta(h)$ and $K(h)$ are estimated from numerical inversion of Richards' equation. As with saturated conditions, a constant head of water is supplied to the screened section. The cumulative volume inflow of water and pressure heads at two locations above the screened section are measured with tensiometer elements during the course of the experiment.

HYDRUS-2D computer code (Šimůnek et al. 1996) is used to simulate the cone permeameter test in unsaturated soil with the finite-element mesh shown in Fig. 4. The governing flow

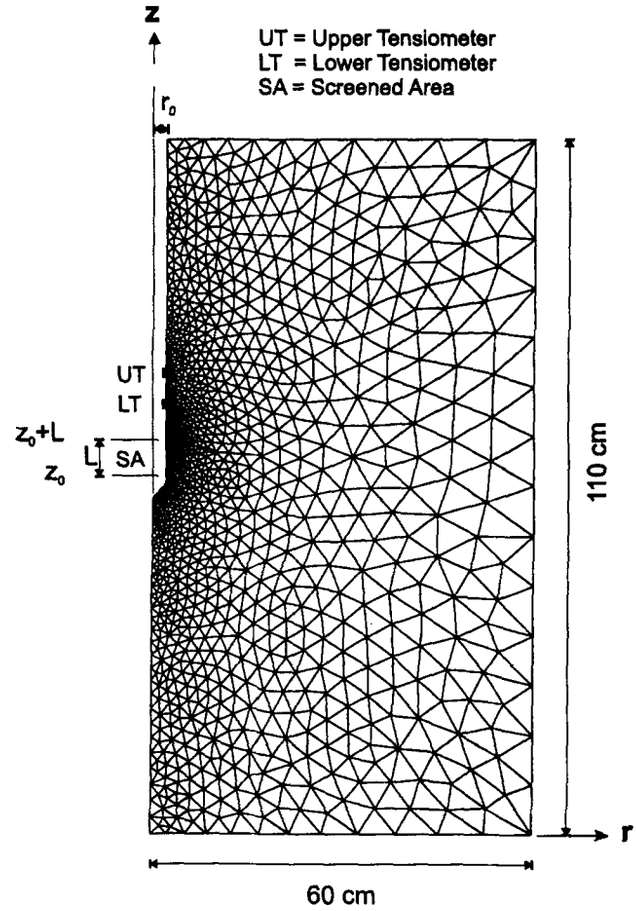

FIG. 4. Finite-Element Mesh Used for Modeling Cone Permeameter Test

equation for radially symmetric, isothermal Darcian flow in an isotropic, rigid porous medium, assuming that the air phase plays an insignificant role in the liquid flow process is (Richards 1931)

$$\frac{1}{r}\frac{\partial}{\partial r}\left[rK\frac{\partial h}{\partial r}\right] + \frac{\partial}{\partial z}\left[K\left(\frac{\partial h}{\partial z} + 1\right)\right] = \frac{\partial \theta}{\partial t} \tag{3}$$

where r = radial coordinate; z = vertical coordinate positive upward; t = time; h = pore-water pressure head; and K and θ = hydraulic conductivity and volumetric moisture, respectively. For this laboratory setup, (3) is solved numerically for the following boundary and initial conditions:

$$h(r, z, t) = h_i(r, z) \quad t = 0 \tag{4}$$

$$h(r, z, t) = h_0 - (z - z_0) \quad r = r_0, \quad z_0 < z < z_0 + L \tag{5}$$

where h_i = initial pressure head in the soil; h_0 = supply pressure head imposed at the bottom of the screened section; z_0 = coordinate of bottom of the screen; L = length of the screened section; and r_0 = radius of the screened section. Exterior boundaries are located far enough away from the source as not to influence the solution and are defined as no-flow boundaries.

The van Genuchten (1980) expressions for the moisture content and hydraulic conductivity $\theta(h)$ and $K(\theta)$ are used in this work

$$\theta_e = \frac{\theta(h) - \theta_r}{\theta_s - \theta_r} = \frac{1}{(1 + |\alpha h|^n)^m} \quad h < 0 \tag{6a}$$

$$\theta_e = 1, \quad h \geq 0 \tag{6b}$$

$$K(\theta) = K_s\theta_e^l[1 - (1 - \theta_e^{1/m})^m]^2 \quad h < 0 \tag{7a}$$

$$K(\theta) = K_s \quad h \geq 0 \tag{7b}$$

where θ_e = effective water content; K_s = saturated hydraulic conductivity; θ_r and θ_s = residual and saturated water contents, respectively; l = pore-connectivity parameter; and α, n, and m ($=1 - 1/n$) = empirical parameters. The predictive $K(\theta)$ model is based on the capillary theory of Mualem (1976) in conjunction with (6). The pore-connectivity parameter l in the hydraulic conductivity function was estimated by Mualem (1976) to be 0.5 for many soils. The hydraulic characteristics defined by (6) and (7) contain five unknown parameters: K_s, θ_r, θ_s, α, and n.

The objective function Φ expressing the differences between flow responses measured with the prototype and those predicted by the numerical model with hydraulic parameter inputs, minimized during parameter optimization process is (Šimůnek and van Genuchten 1997)

$$\Phi(\boldsymbol{\beta}, q_k) = \sum_{j=1}^{k} \left[v_j \sum_{i=1}^{n_j} w_{ij}[q_j^*(t_i) - q_j(t_i, \boldsymbol{\beta})]^2 \right] \tag{8}$$

where k = number of different sets of measurements, such as cumulative inflow volume, or pressure head measurements; n_j = number of measurements in a particular set; $q_j^*(t_i)$ = specific measurements at time t_i for the jth measurement set; $\boldsymbol{\beta}$ = vector of optimized parameters (e.g., K_s, α, θ_s, and n in this work); $q_j(t_i, \boldsymbol{\beta})$ = corresponding model predictions for the parameter vector; and v_j and w_{ij} = weights associated with a particular measurement set or point, respectively. We assume that the weighting coefficients $w_{ij} = 1.0$, i.e., that the variances of the errors in a given measurement set are the same. The weighting coefficients v_j are given by

$$v_j = \frac{1}{n_j \sigma_j^2} \tag{9}$$

thus defining the objective function as the average weighted squared deviation normalized by measurement variances σ_j^2.

Minimization of the objective function Φ is accomplished using the Levenberg-Marquardt nonlinear optimization method (Press et al. 1992), which has become a standard in nonlinear least-squares fitting for hydrologists and soil scientists (van Genuchten 1981; Kool et al. 1985, 1987; van Dam et al. 1992, 1994).

MATERIALS AND METHODS

Laboratory Aquifer Characteristics

Prototype tests were conducted in a laboratory aquifer measuring 4.7 × 4.7 × 2.6 m (Fig. 5). The laboratory aquifer material is a sandy soil with occasional kaolin nodules, underlain by 20 cm of gravel. The small kaolin nodules did not significantly impact the flow regime and therefore were not considered in the simulations. The bulk density of undisturbed samples ranged from 1.65 to 1.69 g/cm^3. The grain-size distribution of the sandy soil is shown in Fig. 6. To simulate field conditions with various soil moisture profiles, the water table in the laboratory aquifer was raised or lowered by pumping water in or out of a French drain system. The hydraulic properties of the soil were determined directly using several standard methods. Pressure plate (ASTM D-2425) tests were performed to evaluate the drainage branches of the $\theta(h)$ curve. Capillary rise tests were used to evaluate the wetting branch of the soil-water characteristic curve (Lambe 1951). A controlled inflow method for obtaining soil-water characteristic curves adapted from Znidarcic et al. (1991) by Ray and Morris (1994) also was used to evaluate the wetting curve. Pressure plate tests and the controlled inflow test were performed on undisturbed samples, whereas the capillary rise column tests were performed on repacked samples. The nonlinear optimization program RETC (van Genuchten et al. 1991) was used to fit $\theta(h)$ data to (6). A series of drive tube samples was taken from the testing area and subject to laboratory constant-head permeability tests (ASTM D-2334). Besides the laboratory tests, slug tests and Guelph permeameter tests were performed in the laboratory aquifer in other studies (Scaturo 1993; Singleton 1997). Slug test data were analyzed using the Bouwer and Rice (1976) equation and Guelph permeameter data were analyzed according the method of Reynolds (1993). The soil hydraulic properties obtained from these tests are presented in Table 1.

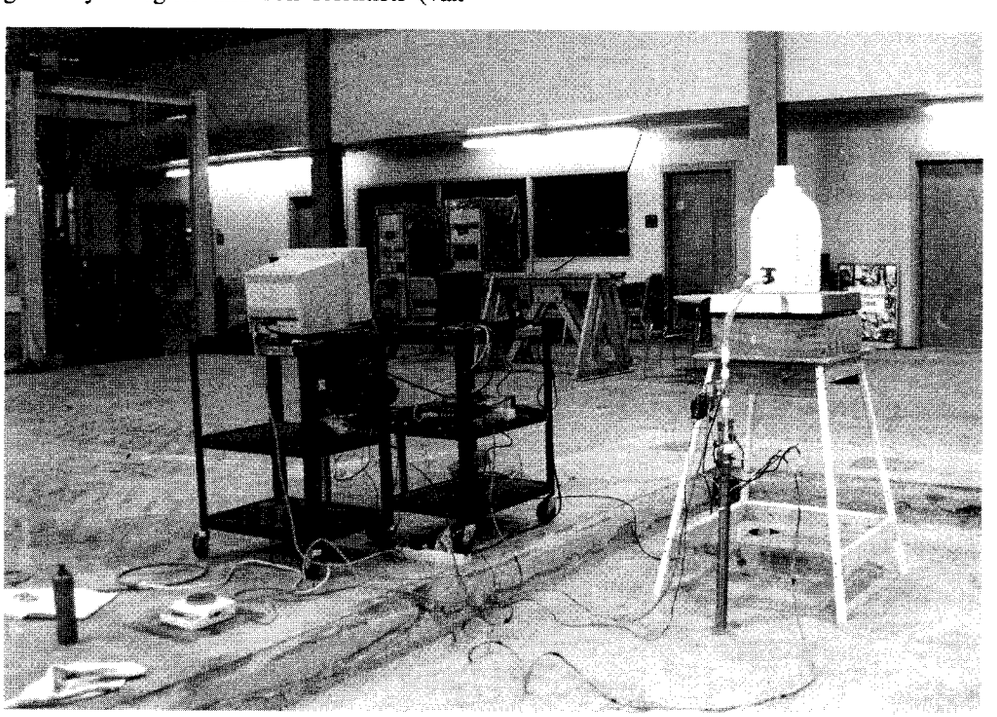

FIG. 5. Setup of Cone Test in Aquifer Testing System

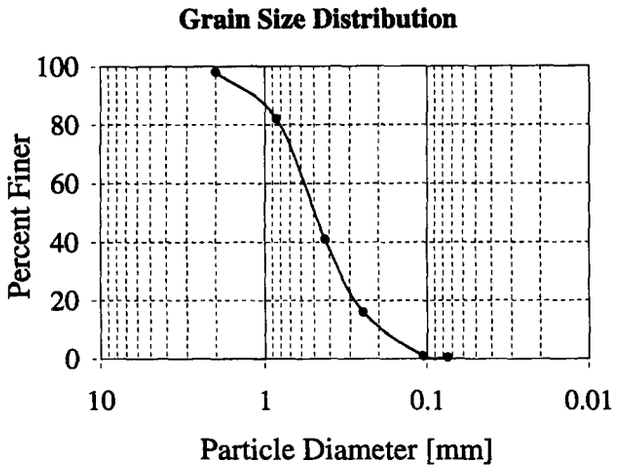

FIG. 6. Grain-Size Distribution for Laboratory Aquifer Material

TABLE 1. Soil-water Characteristic Curve Parameters and Saturated Hydraulic Conductivity Value Obtained from Standard Test Methods and Inversion of Cone Permeameter Data

Test methods (1)	Hydraulic Parameters α (cm^{-1}) (2)	n [−] (3)	θ_s [−] (4)	K_s (cm/s) (5)
Standard test methods				
Capillary rise (wetting curve)[a] (Singleton 1997)	0.086	3.60	0.33	—
Pressure plate (drying curve)[a] (Singleton 1997)	0.036	2.07	0.35	—
Controlled inflow method (wetting curve)[b] (Ray and Morris 1994)	0.139	2.17	0.35	—
Slug tests (Scaturo 1993)[a]	—	—	—	0.0073
Guelph permeameter tests[a] (Singleton 1997)	—	—	—	0.019
Guelph permeameter tests (Scaturo 1993)[a]	—	—	—	0.0035
Constant-head laboratory tests (Singleton 1997)[a]	0.047	4.24	0.21	0.0039
Cone permeameter test methods				
Saturated cone permeameter tests[a] (Leonard 1997)	0.040	2.12	0.35	0.0134
Unsaturated cone permeameter test:[b] Inverse solution 1 (θ_r = 0.008)	0.052	6.99	0.46	0.01188
Unsaturated cone permeameter test:[b] Inverse solution 2 (θ_r = 0.008, θ_s = 0.35)	0.036	2.57	0.35	0.01135

[a]Parameter value determined from several tests.
[b]Parameter value determined from single test.

Test Procedure

The prototype was placed in a hole in the laboratory aquifer and the soil around the cone was backfilled such that the center of the screened section was 65 cm below the soil surface. Note that in the field, the prototype would be pushed into the subsurface with a cone truck or drill rig and testing would commence shortly after placement. In this work, the water table was raised to the soil surface and then drawn down 20 cm. After 24 h, the water table had dropped an additional 6 cm below the soil surface and the first set of tests was performed. Tests were run for 500 s, with applied heads (H) of 11, 20, and 30 cm with respect to the water table for $60 < t < 310$ s. Volumetric flow rates were calculated from scale readings and (1) was used to determine K_s for the soil. The water table then was pumped down to 48 cm below soil surface. Additional tests were run with 20 cm of applied head and the test data were analyzed as before (Leonard 1997).

The next day, the water table was lowered to approximately 190 cm below soil surface to establish unsaturated conditions. This depth ensured that the ensuing tests would not be influenced by the presence of the water table. The laboratory aquifer was undisturbed for 2 weeks before running the unsaturated tests, after which time several tests were run with supply pressure heads of 30 and 50 cm with respect to the center of the screened section. A representative test was selected for presentation here.

For this particular test, flow data were collected electronically every second for $0 < t < 900$ s. Quiescent pressure head data were collected for 60 s prior to starting the supply of water to the screened section. A water pressure head of 50 cm was supplied to the center of the screen for $60 < t < 460$ s. After the source of water was terminated, data collection continued as the water redistributed in the flow regime.

Method of Analysis

Only data obtained at 5-s increments while water was flowing into the soil were used in the parameter optimization problem. Before analysis, cumulative inflow volumes were corrected to account for the slug of water required to fill the constant-head reservoir inside the cone at the beginning of the test. Initial conditions for modeling were based on the conditions in the laboratory aquifer. The water table was 189 cm below ground surface, but the initial pressure head readings at the tensiometer rings were approximately −50 and −47 cm. The volumetric moisture content of a soil sample at the same depth as the screened section of the permeameter was approximately 8%. Because the initial soil moisture distribution near the prototype was neither hydrostatic nor uniform, initial conditions for modeling were selected as follows. The pressure head in the domain was set equal to the initial upper tensiometer reading for the soil at and above the elevation of the upper tensiometer and similarly, equal to the lower tensiometer reading for soil at the elevation of the lower tensiometer and below. The pressure heads between the two tensiometers were distributed linearly. Sensitivity analysis showed that the initial distribution of the pressure heads in the domain has very little effect on solution of the inverse problem. This is caused by the very steep nature of the characteristic curve for pressure heads used as the initial condition; i.e., changes in water content are minimal with changing pressure in this range.

The external boundaries were set as no-flow boundaries for this work. The screened section was modeled as a constant-head boundary, with pressure heads ranging from 52.5 to 47.5 cm of water (bottom to top) for $60 < t < 460$ s. Two inverse solutions were obtained with different sets of optimized parameters. In the first case, inverse solution 1 yielded estimates of the unknown parameters K_s, α, θ_s, and n, for $\theta_r = 0.008$ cm^3/cm^3. Because the estimated value of θ_s obtained from this solution was not consistent with independently measured values, we fixed its value and performed a second inversion, inverse solution 2, to yield estimates of K_s, α, and n, for $\theta_s = 0.35$ cm^3/cm^3 and $\theta_r = 0.008$ cm^3/cm^3. The value of the residual moisture content was set equal to the value obtained from the capillary rise experiments, because it would not be identifiable from a near-saturated test.

RESULTS AND ANALYSIS

Saturated Conditions

Data from the last test in a series of six is shown in Fig. 7 to demonstrate a typical course of experiment under saturated conditions. Although not used in the calculation of K_s, water pressures at the two tensiometers were measured to identify the time at which flow conditions were near steady state. The

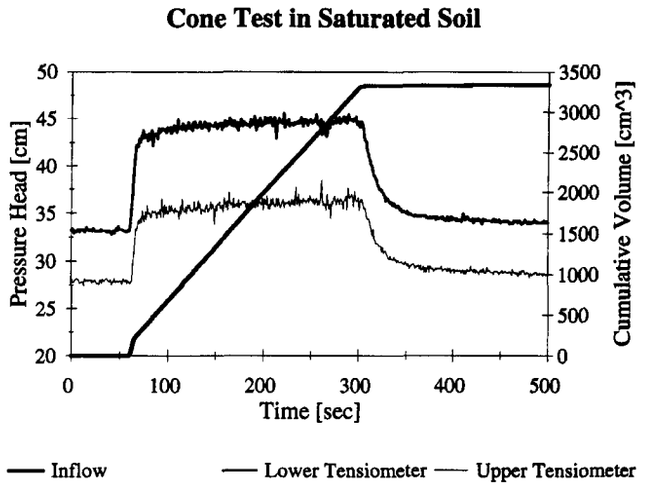

FIG. 7. Typical Flow Data from Cone Permeameter Test in Saturated Soil

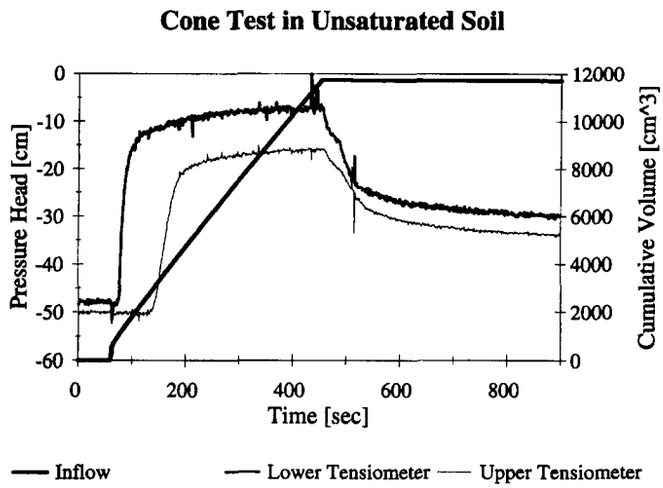

FIG. 8. Typical Flow Data from Cone Permeameter Test in Unsaturated Soil

water table was 26 cm below ground surface and a supply head of 30 cm above that level was used. Tests were run in rapid succession of each other. Fig. 7 shows that the initial pressure heads did not return to the pretest levels of 27.5 and 31.5 cm at the lower and upper tensiometers, respectively, nor did they immediately return to the initial values after the flow of water was stopped. The pressure heads at the two tensiometer rings jumped almost instantly to near steady-state values, as expected for saturated conditions, and were still slightly elevated 200 s after the flow of water ceased. The cumulative inflow volume plot is linear, showing that steady-state flow conditions were attained immediately after the constant-head reservoir was filled. The K_s value was calculated from (1) with the volumetric flow rate from the test Q in cubic centimeters per second and the shape factor $S = 0.0333\ \text{cm}^{-1}$.

Despite the nonequilibrium conditions of the flow regime before testing, K_s values were very stable (Leonard 1997). The mean saturated hydraulic conductivity obtained from analysis of 10 saturated tests in a single location was $K_s = 0.0134$ cm/s, with a standard deviation of 0.0081. This result compared most favorably with K_s values obtained from the two inverse solutions (presented in the next section), the slug test results of Scaturo (1993), and the Guelph permeameter tests of Singleton (1997) (Table 1). The mean K_s value from cone tests was within one standard deviation (0.00728) of the mean of the independently determined values of 0.0084 cm/s, suggesting that the cone permeameter also may be used for determination of K_s in the laboratory aquifer under saturated conditions.

Unsaturated Conditions

Data from a representative test run under unsaturated conditions are shown in Fig. 8. The cumulative inflow volume plot shows that near steady-state flow conditions were attained almost immediately after the constant-head reservoir was filled. The lower tensiometer responded shortly after the start of water flow at $t = 60$ s. The upper tensiometer responded approximately 100 s later, rose less steeply, and reached a lower steady-state head than the lower tensiometer. When the flow of water was stopped at $t = 460$ s, the pore-water pressure heads declined logarithmically.

Cumulative flow and pressure head data for the interval $60 < t < 460$ s at 5-s increments were analyzed to obtain soil hydraulic properties using the inverse code of Šimůnek and van Genuchten (1996) at first with only θ_r fixed. The predicted flow responses from the inverse solution are compared with observed data in Fig. 9 (inverse solution 1). The cumulative

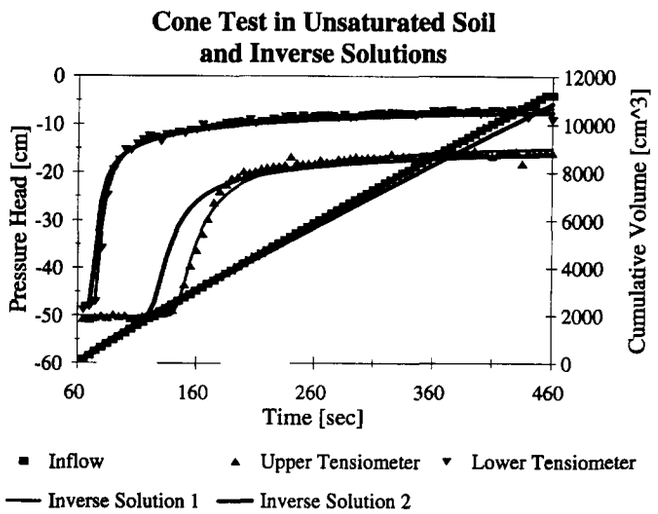

FIG. 9. Comparison of Observed Flow Data with Inverse Solution 1 and 2 Predictions

inflow volume with time is well predicted by the inverse solution. Predicted pressure heads track closer to the measured responses for the lower tensiometer (5 cm from the screen) than for the upper one (9 cm from the screen), but both are very close to the observed data.

The K_s value obtained from inverse solution 1 is very close to the mean value obtained from the saturated cone permeameter tests (0.01188 cm/s versus 0.0134 cm/s). This close correlation is expected, because the same instrument and location were used for the saturated and unsaturated tests. The K_s value from the inverse solution was higher than that obtained from the other field-scale tests sharing similar geometry and area of influence, with the exception of the Guelph permeameter tests performed by Singleton (1997) (Table 1). The inverse result was also higher than the mean value obtained from constant-head tests in the laboratory (0.01188 cm/s versus 0.00385 cm/s).

The soil-water characteristic curves obtained from the inversion of unsaturated cone test data and wetting and drying curves obtained from the laboratory measurements fit to (6) with RETC (van Genuchten et al. 1991) are shown in Fig. 10. The curve parameters are shown in Table 1. The curve resulting from the optimization process (inverse solution 1) was most similar in shape to the composite wetting curve obtained from capillary rise experiments at the lower pressure head values. The saturated moisture content returned by the inverse

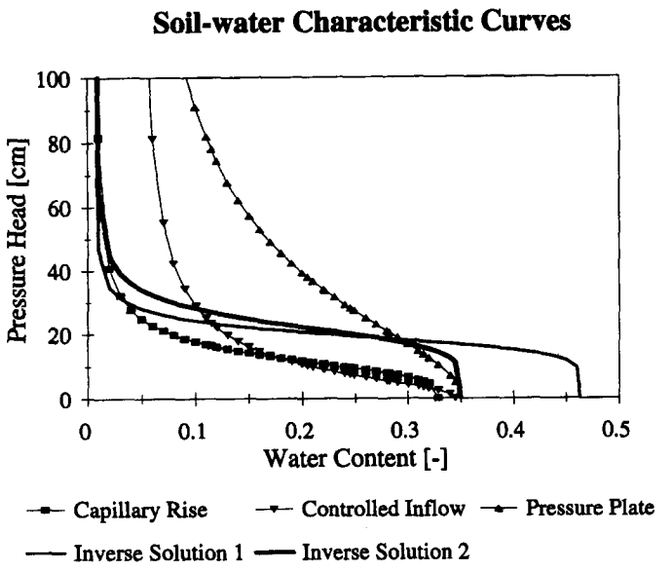

FIG. 10. Comparison of Soil-Water Characteristic Curves Obtained by Direct Methods with Those Obtained from Inversion of Cone Permeameter Data

solution (θ_s = 0.463) was much higher than that obtained from other test methods, which had a large influence on the shape of the characteristic curve at the pressure head values near zero. Earlier numerical experiments with error-free synthetic data showed that an objective function similar to (8) was most sensitive to saturated hydraulic conductivity K_s and progressively less sensitive to α, θ_s, and n (Gribb 1996). Here K_s was estimated correctly by the inverse solution for this test, whereas θ_s was not. Therefore, to discover the influence of θ_s on the inverse problem, another inversion was performed in which θ_s was set equal to 0.35. The resulting fit to measured data is shown in Fig. 9 as inverse solution 2. The fit of the cumulative inflow volume and the upper tensiometer are not as good as for inverse solution 1 in which θ_s was optimized. However, the resulting soil-water characteristic curve naturally takes on a more realistic shape at the pressure heads near zero, as the θ_s value is more in line with the other measured values. Both inverse solutions return α and n values that are larger than those obtained for the other test methods, but are closest in value to those obtained from capillary rise test data.

CONCLUSIONS

In this paper we present a prototype cone permeameter for collection of transient flow data in unsaturated soil and steady-state flow data in saturated soil for determination of hydraulic properties. A calibration chamber and procedure were designed to calibrate the permeameter tensiometer elements for measurement of negative pore-water pressures in unsaturated soil. Following calibration, tests were performed in a characterized laboratory aquifer system to demonstrate the use of the prototype. The performance of the test and subsequent analysis of steady-state data in saturated soil and transient data in unsaturated soil are discussed. Because the cone was not moved between tests, K_s values obtained from both methods can be compared directly without regard for spatial variability.

We found that the cone permeameter flow data could be analyzed with Hvorslev's (1951) (1) to determine K_s of sandy soil in the laboratory aquifer under saturated conditions. The mean K_s value obtained with saturated test data was closest to the independently determined slug tests of Scaturo (1993) and Guelph permeameter tests performed by Singleton (1997) and less than an order of magnitude higher than values obtained using constant-head tests. However, all values of K_s for the laboratory aquifer were within one order of magnitude of each other.

In unsaturated soil, the inverse solution provided a good fit between measured and predicted flow responses (i.e., pressure head and cumulative flow volume) for the course of a cone permeameter test. The K_s value was well estimated by the inverse solution, whereas θ_s was much higher than the porosity of undisturbed samples from the laboratory aquifer would suggest. Although the inverse solution for θ_s = 0.35 (inverse solution 2) produced a better fit of the soil-water characteristic, it yielded a poorer fit of the flow data. Fig. 9 shows that the water reaches the tensiometers too quickly in this case, suggesting that θ_s = 0.35 is too small. Although the undisturbed samples from the laboratory aquifer had dry densities of 1.65–1.69 g/cm^3, it is quite possible that the soil that backfilled around the cone permeameter was not as dense as the undisturbed soil. Therefore, the θ_s obtained from inversion 1 may be more appropriate for the conditions of the test than the value of 0.35. Drawing specific conclusions regarding the van Genuchten parameters α and n is difficult, because the parameter values obtained from other direct tests vary. However, it is clear that more work needs to be done to improve the identifiability of these parameters if this method is to be applied under field conditions. Šimůnek et al. (1998) found that inclusion of the initial moisture content in the soil, as well as the final moisture content in the soil after testing, may dramatically improve the identifiability of those parameters with the tension disc infiltrometer.

It is well known that the soil fabric is disturbed because of cone penetration, and the resulting densification or loosening of the soil near the cone will greatly affect the hydraulic properties of the soil. Therefore, disturbance caused by cone penetration must be addressed for this method to progress further. In addition, a more robust cone permeameter, with automatic flow control and internal transducers, is needed to test this method under field conditions. Such a second-generation prototype has been designed and is under construction. Future work will include quantification of the effects of disturbance and field testing in different soil types. We also envision incorporation of time domain reflectometry components into the device to provide soil moisture information in addition to the pressure head data to be used in the inverse solution.

The cone permeameter has the potential to provide a minimally intrusive means for measuring hydraulic parameters in the field, both in the near surface and at depth, while overcoming many of the shortcomings of other techniques for insitu measurement of the hydraulic properties of soils near saturation. A significant advantage to this new approach is that potentially contaminated materials need not be removed during the course of testing. Because cone penetration technology is applicable to depths of 30 m or more, it will not be limited to near-surface use. Finally, steady-state flow assumptions and/or approximation of the governing equation are not required for solution to obtain the hydraulic properties in unsaturated soil.

Since completing this work, this method and device have been further studied by running tests after direct push of the permeameter to the desired testing depth (Kodešová et al. 1998a). Variation of the source strength and number of parameters estimated, inclusion of additional soil moisture information, and the effects of placement also have been studied (Kodešová et al. 1998b).

ACKNOWLEDGMENTS

The writers thank the anonymous reviewers for their suggestions. They also recognize R. Kodešová for her important contributions to this work, as well as R. P. Ray, J. E. Singleton, and S. Anderson. Support of this work by U.S. Army Research Office Grant No. DAAH04-95-1-0228 and National Science Foundation CAREER Grant No. CMS-9501772 is gratefully acknowledged.

APPENDIX I. REFERENCES

Benson, C. H., and Gribb, M. M. (1997). "Measuring unsaturated hydraulic conductivity in the laboratory and field." *Unsaturated soil engineering practice, Geotech. Spec. Publ. No. 68*, S. L. Houston and D. G. Fredlund, eds., American Society of Civil Engineers, New York, N.Y., 113–168.

Bouwer, H., and Jackson, R. D. (1974). "Determining soil properties." *Drainage for agriculture*, American Society of Agronomy, Madison, Wis., 611–672.

Bouwer, H., and Rice, R. C. (1976). "A slug test for determining hydraulic conductivity of unconfined aquifers with completely or partially penetrating wells." *Water Resour. Res.*, 12(3), 423–428.

Campanella, R. G., and Robertson, P. K. (1988). "Current status of the piezocone test." *Penetration testing 1988, ISOPT-1*, A. A. Balkema, Rotterdam, The Netherlands, 93–116.

Dane, J. H., and Hruska, S. (1983). "In-situ determination of soil hydraulic properties during drainage." *Soil Sci. Soc. Am. J.*, 47(4), 619–624.

Dayton, D., and Holmes, R. (1993). "A moisture sensing cone penetrometer." *Proc. of the Ohio Buried Valley Aquifer Mgmt. Sys. Evaluation Area Colloquim*, N. L. Watermeier, Ohio State University, Columbus, Ohio.

Eching, S. O., and Hopmans, J. W. (1993). "Optimization of hydraulic functions from transient outflow and soil water pressure data." *Soil Sci. Soc. of Am.*, 57(5), 11167–11175.

Gribb, M. M. (1993). "At depth determination of hydraulic conductivity of unsaturated porous media via analysis of transient flow data," PhD dissertation, University of Wisconsin-Milwaukee, Wis.

Gribb, M. M. (1996). "Parameter estimation for determining hydraulic properties of a fine sand from transient flow measurements." *Water Resour. Res.*, 32(7), 1965–1974.

Hvorslev, M. J. (1951). "Time lag and soil permeability in ground-water observations." *WES Bull. No. 36*, U.S. Army Corps of Engineers, Vicksburg, Miss.

Inoue, M., Šimůnek, J., Hopmans, J. W., and Clausnitzer, V. (1998). "In-situ estimation of soil hydraulic functions using a multi-step soil-water extraction technique." *Water Resour. Res.*, 34(5), 1035–1050.

IOtech, Inc. (1994). *DaqBook user's manual*. Part #232-0920, Revision 2.3, IOtech, Inc., Cleveland, Ohio.

Klute, A., and Dirksen, C. (1986). "Hydraulic conductivity and diffusivity: Laboratory methods." *Methods of soil analysis, Part 1, physical and mineralogical methods*, 2nd Ed., A. Klute, ed., Soil Science Society of America, Madison, Wis., 687–729.

Kodešová, R., Gribb, M. M., and Šimůnek, J. (1998a). "A new CPT method for estimating soil hydraulic properties." *Proc. Int. Site Characterization Conf.*, Vol. 2, P. K. Robertson and P. W. Mayne, eds., A. A. Balkema, Rotterdam, The Netherlands, 1421–1425.

Kodešová, R., Gribb, M. M., and Šimůnek, J. (1998b). "Estimating soil hydraulic properties from transient cone permeameter data." *Soil Sci.*, 163(6), 436–453.

Kool, J. B., Parker, J. C., and van Genuchten, M. T. (1985). "Determining soil hydraulic properties from one step outflow experiments by parameter estimation: I. Theory and numerical studies." *Soils Sci. Soc. Am. J.*, 49, 1348–1354.

Kool, J. B., Parker, J. C., and van Genuchten, M. T. (1987). "Parameter estimation for unsaturated flow and transport models—a review." *J. Hydro.*, Amsterdam, The Netherlands, 91, 255–293.

Laboratory Technologies Corp. (1994). *Labtech windows user's guide, 4/94 release*. Laboratories Technologies Corp., Wilmington, Mass.

Lambe, W. T. (1951). "Capillary phenomena in cohesionless soils." *Trans. Am. Soc. Civ. Engrs.*, ASCE, 116, 401–423.

Leonard, M. F. (1997). "Design and laboratory evaluation of a cone permeameter for unsaturated soil hydraulic parameter determination," MS thesis, University of South Carolina, Columbia, S.C.

Mualem, Y. (1976). "A new model for predicting the hydraulic conductivity of unsaturated porous media." *Water Resour. Res.*, 12, 513–522.

Omega Technologies Company (OTC). (1994). *PX236 series pressure transducers, operator's manual: M0236/0894*. OTC, Stamford, Conn.

Parker, J. C., Kool, J. B., and van Genuchten, M. T. (1985). "Determining soil properties from one-step outflow experiments by parameter estimation, II. Experimental studies." *Soil Sci. Soc. Am. J.*, 49, 1354–1359.

Petsonk, A. M. (1985). "A device for in situ measurement of hydraulic conductivity." *Paper presented at Symp. on Adv. in Hydr. Testing and Tracer Methods*, American Geophysical Union, Washington, D.C.

Press, W. H., Teukolsky, S. A., Vetterling, W. T., and Flannery, B. P. (1992). *Numerical recipes in fortran: The art of scientific computing*, 2nd Ed., Cambridge University Press, Cambridge, England.

Ray, R. P., and Morris, K. B. (1994). "Automated laboratory testing for soil/water characteristic curves." *Proc., 1st Int. Conf. on Unsaturated Soils*, E. Alonso and P. Delage, eds., Balkema, Rotterdam, The Netherlands, 2, 236–241.

Reynolds, W. D. (1993). "Unsaturated hydraulic conductivity: Field measurement." *Soil sampling and methods of analysis*, M. R. Carter, ed., Canadian Society of Soil Science, Lewis Publishers, Boca Raton, Fla., 633–644.

Richards, L. A. (1931). "Capillary conduction of liquids through porous mediums." *Physics*, 1, 318–333.

Scaturo, D. M. (1993). "Evaluation of multi-level direct push sampling for hydraulic conductivity analysis," MS thesis, University of South Carolina, Columbia, S.C.

Šimůnek, J., Sejna, M., and van Genuchten, M. T. (1996). *HYDRUS_2D, simulation water flow and solute transport in two-dimensional variably saturated media*. TPS 53, International Groundwater Modeling Center, Colorado School of Mines, Golden, Colo.

Šimůnek, J., and van Genuchten, M. T. (1996). "Estimating unsaturated soil hydraulic properties from tension disk infiltrometer data by numerical inversion." *Water Resour. Res.*, 32(9), 2683–2696.

Šimůnek, J., and van Genuchten, M. T. (1997). "Estimating unsaturated soil parameters from multiple tension disc infiltrometer data." *Soil Sci.*, 162(6), 383–398.

Šimůnek, J., Wang, D., Shouse, P. J., and van Genuchten, M. T. (1998). "Analysis of a field tension disc infiltrometer experiment by parameter estimation." *Int. Agrophys.*, in press.

Singleton, J. E. (1997). "Hydraulic characteristics of a laboratory aquifer," MS thesis, University of South Carolina, Columbia, S.C.

Soilmoisture Corporation. (1989). *2100F operating instructions*. Soilmoisture Corp., Santa Barbara, Calif.

Standard test method for capillary-moisture relationships for coarse- and medium-textured soils by porous-plate method, D-2325, Vol. 4.08, Soil and Rock, Dimension Stone; Geosynthetics. (1994). ASTM, Philadelphia, Pa.

Standard test method for permeability of granular soils (constant head); D-2334, Vol. 4.08, Soil and Rock; Dimension Stone; Geosynthetics. (1993). ASTM, Philadelphia, Pa.

Topp, G. C., St.-Amour, G., and Compton, B. A. (1996). "Measuring cone resistance and water content with TDR-penetrometer combination." *Agronomy Abstracts*, Soil Science Soc. of America, 191.

van Dam, J. C., Stricker, N. M., and Droogers, P. (1992). "Inverse method for determining soil hydraulic functions from one-step outflow experiments." *Soil Sci. Soc. Am. J.*, 56, 1042–1050.

van Dam, J. C., Stricker, N. M., and Droogers, P. (1994). "Inverse method to determine soil hydraulic functions from multi-step outflow experiments." *Soil Sci. Soc. Am. J.*, 58, 647–652.

van Genuchten, M. T. (1980). "A closed-form equation for predicting the hydraulic conductivity of unsaturated soils." *Soil Sci. of Am. J.*, 44, 892–898.

van Genuchten, M. T. (1981). "Non-equilibrium transport parameters from miscible displacement experiments." *Res. Rep. No. 119*, U.S. Salinity Laboratory, U.S. Department of Agriculture, Agricultural Research Service, Riverside, Calif.

van Genuchten, M. T., Leij, F. J., and Yates, S. R. (1991). *The RETC code for quantifying the hydraulic functions of unsaturated soils*. U.S. Environmental Protection Agency, Ada, Okla.

Wooding, R. A. (1968). "Steady infiltration from large shallow circular pond." *Water Resour. Res.*, 4, 1259–1273.

Zachmann, D. W., Duchateau, P. C., and Klute, A. (1981). "Simultaneous approximation of water capacity and soil hydraulic conductivity by parameter identification." *Soil Sci.*, 134, 157–163.

Znidarčić, D., Illangasekare, T., and Manna, M. (1991). "Laboratory testing and parameter estimation for two-phase flow problems." *Geotechnical engineering congress*, F. G. McLean, D. A. Campbell, and D. W. Harris, eds., *Geotech. Spec. Publ. No. 27*, Vol. 1, ASCE, New York, N.Y.

APPENDIX II. NOTATION

The following symbols are used in this paper:

H = applied head above ground-water table for saturated test;
h = pore-water pressure head;
h_i = initial pressure head in soil;
h_0 = supply pressure head imposed at bottom of screened section;
K = hydraulic conductivity;
$K(h)$ = hydraulic conductivity of unsaturated soil;
K_h = horizontal hydraulic conductivity of saturated soil;
K_s = saturated hydraulic conductivity;

K_z = vertical hydraulic conductivity;
k = number of different sets of measurements;
L = length of screened section;
l = pore-connectivity parameter;
m = van Genuchten-Mualem curve fitting parameter;
n = van Genuchten curve-fitting parameter;
Q = volumetric rate of flow into soil from screened section;
$q_j^*(t_i)$ = specific measurements at time t_i for jth measurement set;
r = radial coordinate;
R_k = ratio of horizontal to vertical hydraulic conductivity;
r_0 = screened section and cone radius;
S = shape factor;
t = time;
v_j = weight associated with particular measurement set;
w_{ij} = weight associated with particular point;
z = vertical coordinate positive upward;
z_0 = coordinate of bottom of screen;
α = van Genuchten fitting parameter;
$\boldsymbol{\beta}$ = vector of optimized parameters (e.g., K_s, α, θ_s, and n);
θ = volumetric moisture content;
$\theta(h)$ = soil-water characteristic of unsaturated soil;
θ_e = effective moisture content;
θ_r = residual volumetric moisture content;
θ_s = saturated volumetric moisture content;
σ_j^2 = measurement variances; and
Φ = objective function expressing difference between flow response measured by prototype and those predicted by numerical model with hydraulic parameter inputs.